Power supply for comfortDIM systems (DALI protocol)
for DIN rail

DALI PS

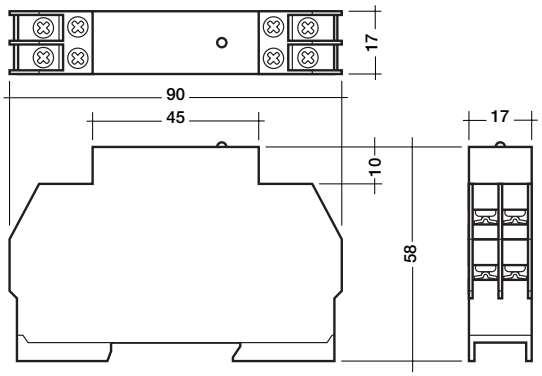

Functional description

Central DALI power supply rated at 200 mA (DALI standard allows max. 250 mA)
The controls interface of a DALI ballast normally sources 2 mA, with 64 individual addresses this will source 128 mA. The remaining 72 mA can be used to power other DALI controls without an internal power supply such as the DALI GC and DALI SC.

Installation

- DALI signals are not SELV. Therefore the same procedures should be applied as working with mains voltage.
- Individual DALI circuits must not exceed 200 mA.
- The maximum cable length of the DALI signal wires must not exceed 300 m or drop more than 2 V on the signal line voltage.

Circuit diagram

type			DALI PS
article number			24033444
supply	voltage	V	120 – 240
	frequency	Hz	50/60
	max. load	W	4
output	-	-	DALI
	max. current	mA	200
temperature	permitted ambient temperature	°C	0 – 50

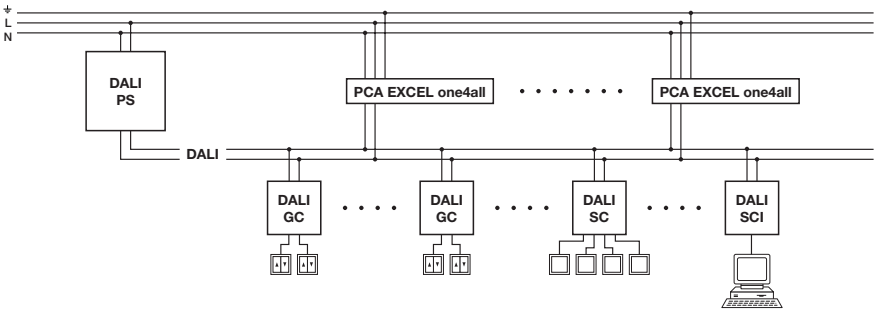

TRIDONIC.ATCO